Powerlite
Phone 02 9912 5000 **Email** sales@powerlite.com.au **Website** www.powerlite.com.au

Generator set

Sound-proof type

WPS750S-AU

SPECIFICATIONS

EP series
WPS750S-AU

50 Hz @ 1500rpm, 3-Phase/4-wiring

1 Standards & Conditions

Design Standards

The designs and the productions are in conformity with:

- Conformite Europeenne (CE)
- ISO8528-5:2005
- AS 3000-2018
- AS 3010-2017

Environmental Operating Conditions

- Installation place: Outdoors or indoors (well ventilated).
- Ambient temperature: -25℃ to 50℃. The coolant heater is needed when the temperature is below 5℃
- Humidity: Less than 80%.
- Altitude: Below one thousand (1000) meters above sea Level.

Factory Inspection

- Inspection items.
- Protection devices working test.
- Starting ability in normal temperature.
- 50% rated power load moment capability.
- Voltage deviation and speed variation: 0%, 25%, 50%, 75%, 100%, 110% Load.

Painting Process

- Painting process specifications and colors are based on the manufacturer's standard.
- The customer could also choose the color which the manufacturer offers.

2 General Features

- Perkins engine 2806A-E18TAG5
- Close coupled to Leroy Somer alternator LSA49.3M8
- Microprocessor control module PLC-7420
- ABB main circuit breaker: 1250A
- Rotate speed governor: Electronic governor
- Excitation system: AREP
- A.V.R
- Key switch
- Emergency stop switch
- ATS (automatic transfer switch) receptacle
- 2x12V/150AH sealed for life maintenance free battery
- Lockable battery isolator switch
- Powder coated canopy
- 50℃ radiator
- Oil pump on the engine
- Vibration isolators between the engine/alternator and base frame
- Dry type air filter
- Base fuel tank with 12 hours running
- Drain points for fuel tank
- Operation Manual / Specifications

3 Equipment Specification

General technical data

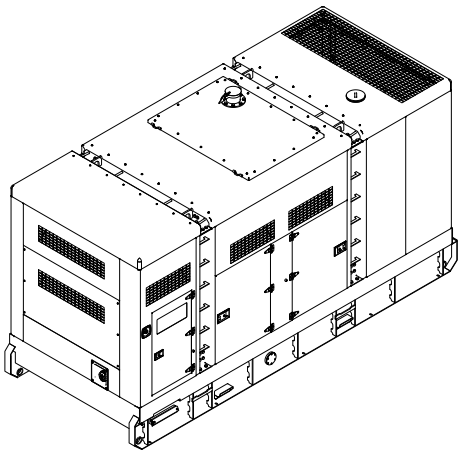

Model..... WPS750S-AU

Structure type .....R

Tank capacity.....1650L

Dry weight..... 6653kg

Noise level @7m .....N/A

Dimensions L×W×H..... 4700x1750x2615mm

Standby Power 825kVA/660kW

Prime Power 750kVA/600kW

Voltage	380V	400V	415V	440V
Ampere	1140A	1083A	1043A	984A

Genset Fuel Consumption					
Frequency/Load	25%	50%	75%	100%	110%
50Hz (L/h)	34	67	97	132	145

Power System

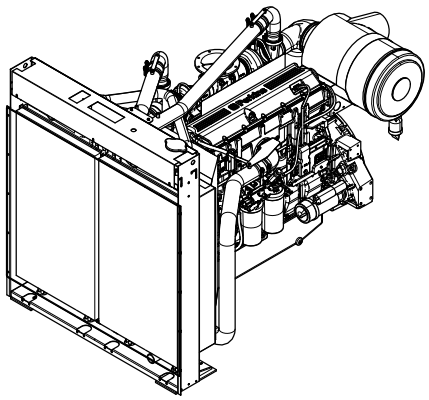

Engine Manufacturer/Brand.....Perkins
Engine Model..... 2806A-E18TAG5
Dimensions L×W×H.....2545×1536×1807.5mm
Dry Weigh (approx.) 2050kg
Number of Cylinders.....6
Bore 145mm
Stroke 183mm
Displacement.....18.13L
Compression Ratio.....14.5
Type of Injection .....MEUI
Intake System..... Turbocharged,air-to-air charge cooled
Intake Resistance.....≦6.4kPa
Cooling System .....Water cooled
Fan ..... Pusher
Battery Voltage 24V
Type of Fuel..... BS2869 class A2 or BS EN590
Type of Oil ..... API CG4 or APEA E5
Oil Capacity 62L
Type of Coolant .....Glycol Mixture
Coolant capacity.....61L
Back Pressure .....≦6.9kPa
Standby Power 739kW
Prime Power.....671kW
Fuel Consumption(100%load).....132L/h

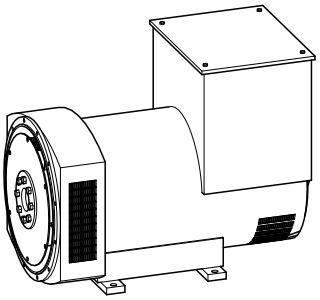

Alternator Manufacturer/Brand ..... Leroy Somer
Alternator Model LSA49.3M8
Exciter.....Brushless
Cooling Fan ..... Cast alloy aluminum
Windings.....100% copper
Insulation Class ..... H
Winding Pitch.....2/3
Terminals 12
Drip Proof IP23
Altitude.....≤1000m
Overspeed .....2250 rpm
Air Flow..... 1.035m³/s(50HZ),1.312m³/s(60HZ)
Voltage Regulation .....±1.0%
Total harmonic TGH / THCat no load < 1.5 % - on load < 5%
Telephone Interference.....THF<2%;TIF<50

PLC-7420 Control System

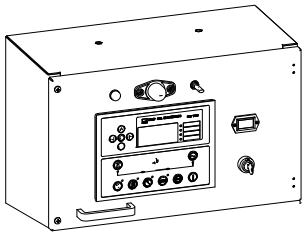

PLC-7420 is an advanced control module based on microprocessor, containing all necessary functions for protection of the genset and the breaker control. It can monitor the mains supply, and automatically start the engine when the mains is abnormal. Accurately measure various operational parameters and display all values and alarms information on the LCD. In addition, the control module can automatically shut down the engine and indicate the engine failure.

- Microprocessor control, with high stability and credibility
- Monitoring and measuring operational parameters of the mains supply and genset
- Indicating operation status, fault conditions, all parameters and alarms
- Multiple protections; multiple parameters display, like pressure, temp. etc.
- Manual, automatic and remote work mode selectable
- Real time clock for time and date display, overall runtime display, 250 log entries
- Overall power output display
- Integral speed/frequency detecting, telling status of start, rated operation, overspeed etc.
- Communication with PC via RS485 OR RS232 interface, using MODBUS protocol

4 Overall Dimensions

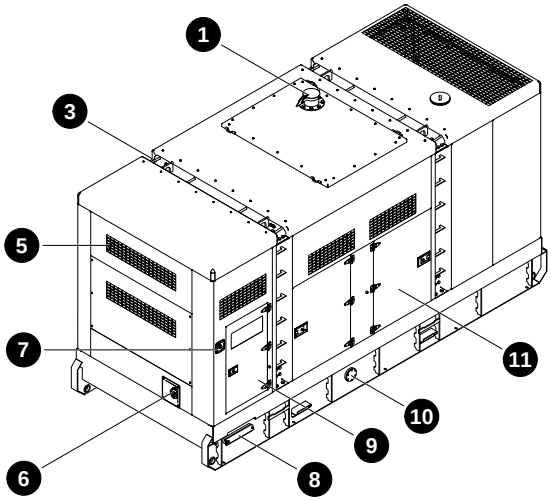

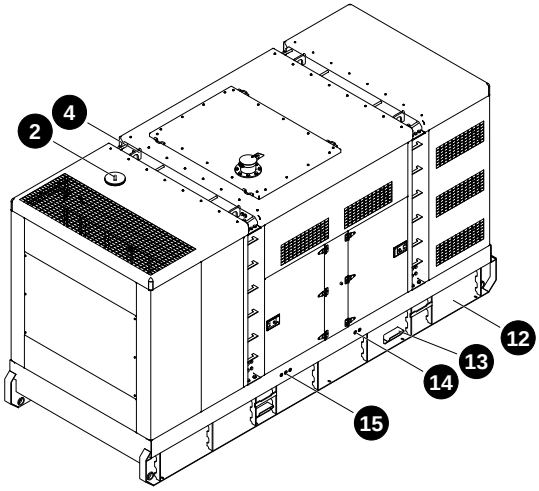

⑧ Cable trench
⑦ Emergency stop switch
⑥ Fuel inlet
⑤ Air inlet
④ Lifting lug
③ Roping lug
② Coolant inlet
① Exhaust gas outlet
⑮ External fuel inlet/return hose fitting
⑭ Coolant/Oil drain hose fitting
⑬ Fork lift channel
⑫ Base frame
⑪ Access door
⑩ Fuel drain
⑨ Control cabinet

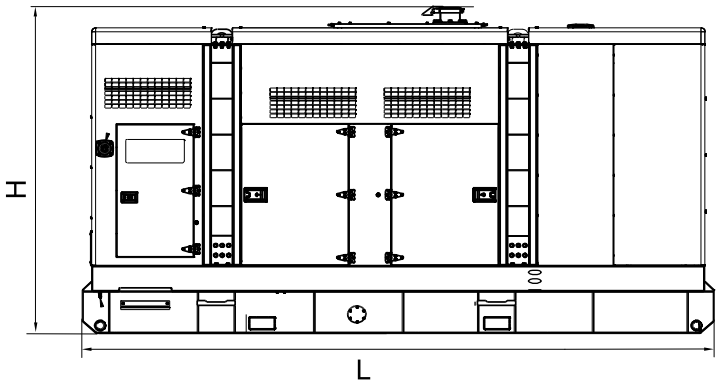

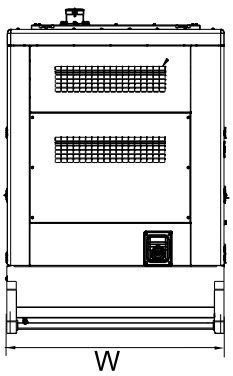

5 Control system

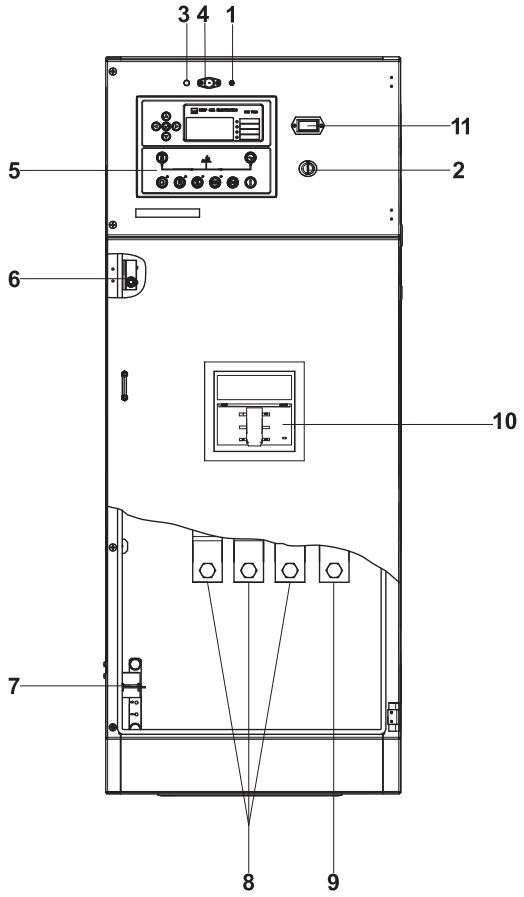

Control & field wiring cabinet

Ref.	Description
1	Control panel lamp switch
2	Key switch
3	Charge indicator
4	Control panel lamp
5	Control module
6	Limit switch
7	Mains input/remote/ATS/AMF communication connector
8	Live wire terminals
9	Neutral wire terminal
10	Main circuit breaker
11	Time counter

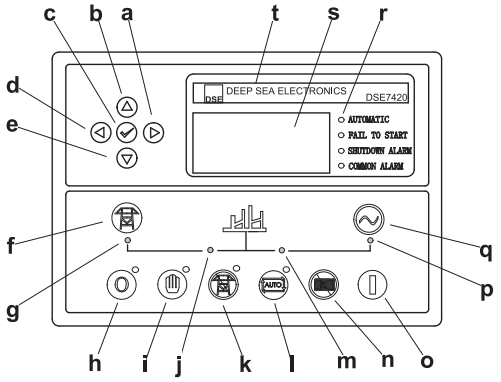

Control module

a	Button (next page)
b	Button (increase value / previous item)
c	Button (accept)
d	Button (previous page)
e	Button (decrease value / next item)
f	Button (transfer the load to the mains supply, when in Manual mode only)
g	Mains supply available LED
h	Stop / Reset button
i	Manual button (Manual control mode)
j	Mains supply on load LED
k	Test button (Test mode)
l	Auto button (Auto mode)
m	Genset on load LED
n	Mute/Lamp test button
o	Start button (Manual)
p	Genset available LED
q	Button (transfer the load to the genset, when in Manual mode only)
r	Alarm LED (4 alarm items)
s	LCD display
t	Control module name